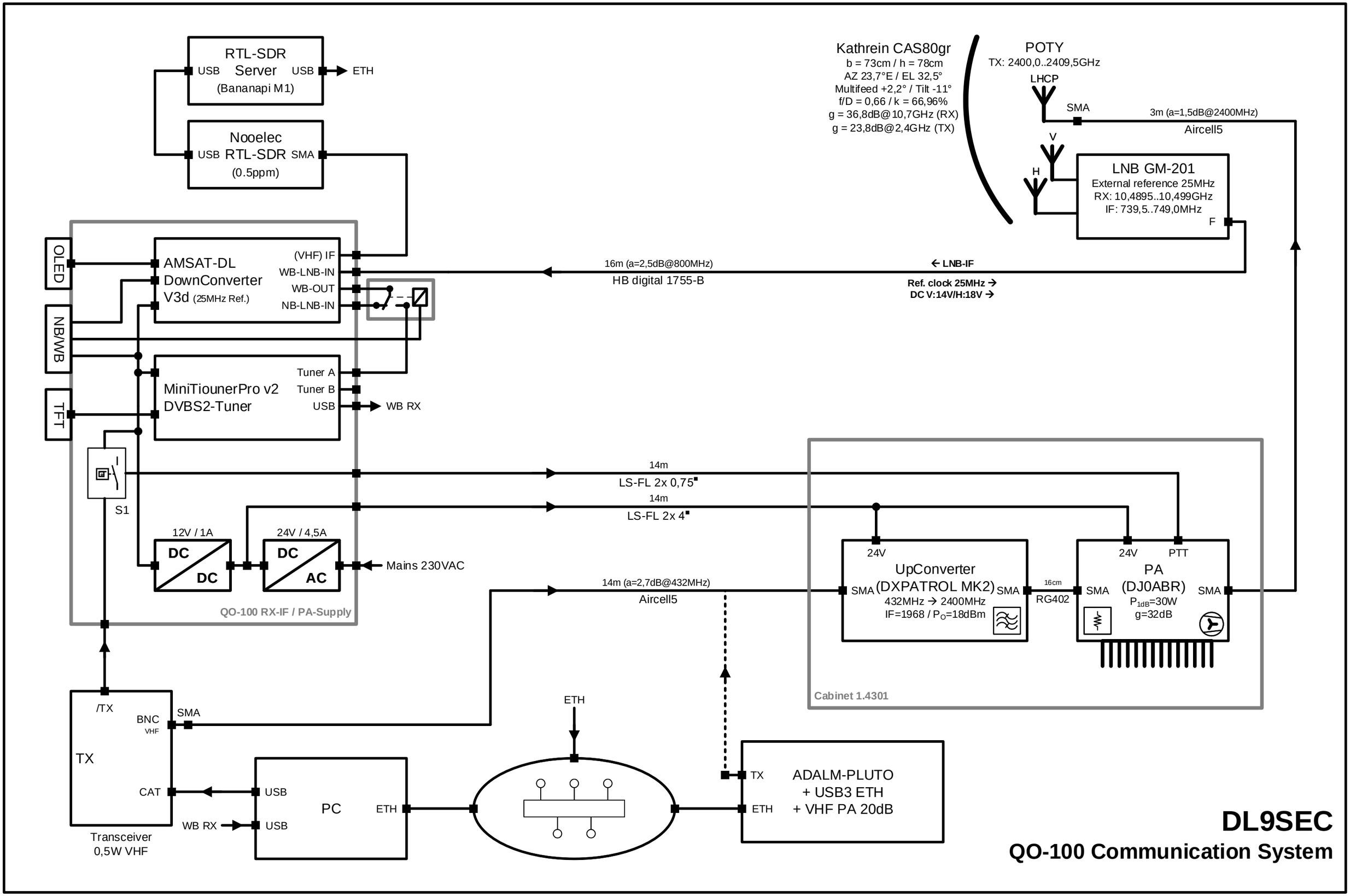
RTL-SDR
Server
(Bananapi M1)
USB
USB
ETH
Nooelec
RTL-SDR
(0.5ppm)
USB
SMA
Kathrein CAS80gr
b = 73cm / h = 78cm
AZ 23,7°E / EL 32,5°
Multifeed +2,2° / Tilt -11°
f/D = 0,66 / k = 66,96%
g = 36,8dB@10,7GHz (RX)
g = 23,8dB@2,4GHz (TX)
POTY
TX: 2400,0..2409,5GHz
LHCP
SMA
3m (a=1,5dB@2400MHz)
Aircell5
V
H
LNB GM-201
External reference 25MHz
RX: 10,4895..10,499GHz
IF: 739,5..749,0MHz
F
OLED
NB/WB
TFT
AMSAT-DL
DownConverter
V3d (25MHz Ref.)
(VHF) IF
WB-LNB-IN
WB-OUT
NB-LNB-IN
16m (a=2,5dB@800MHz)
HB digital 1755-B
← LNB-IF
Ref. clock 25MHz →
DC V:14V/H:18V →
MiniTiounerPro v2
DVBS2-Tuner
Tuner A
Tuner B
USB
WB RX
S1
14m
LS-FL 2x 0,75
14m
LS-FL 2x 4
12V / 1A
24V / 4,5A
DC
DC
DC
AC
Mains 230VAC
QO-100 RX-IF / PA-Supply
14m (a=2,7dB@432MHz)
Aircell5
24V
UpConverter
(DXPATROL MK2)
432MHz → 2400MHz
IF=1968 / P_O=18dBm
SMA
SMA
16cm
RG402
24V
PTT
PA
(DJ0ABR)
P_1dB=30W
g=32dB
SMA
SMA
Cabinet 1.4301
/TX
BNC
VHF
SMA
TX
CAT
Transceiver
0,5W VHF
WB RX
USB
USB
PC
ETH
ETH
TX
ETH
ADALM-PLUTO
+ USB3 ETH
+ VHF PA 20dB
DL9SEC
QO-100 Communication System